Prize Wheel User Manual

Safety Instructions

1. Children should be accompanied by an adult when using this product.
2. If not used, keep the hardware parts out of reach of children to avoid risk of choking.
3. Use the product on a solid and level ground.
4. Ensure the connecting parts are well fastened before using the product.
5. Keep the product away from fire and heating sources. Store it in dry and well ventilated place.
6. Using the product for its unintended purpose might result in bodily injury.

Package Contents

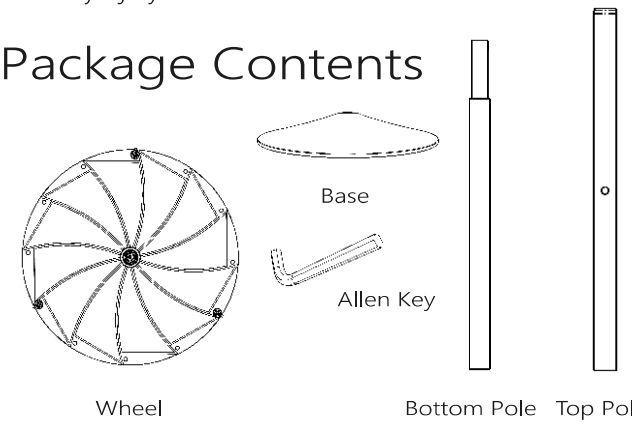

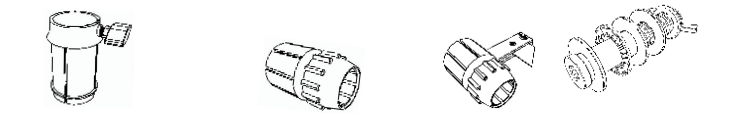



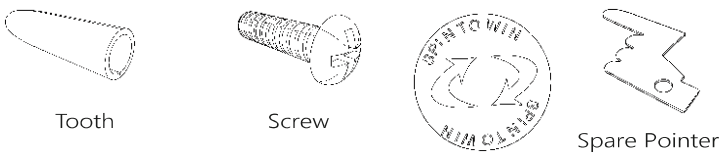

WARNING

Edge of spinning wheel may cause injury

转盘旋转时 请勿触碰

1300 550 168
www.bigbanner.com.au

Assembly Instructions

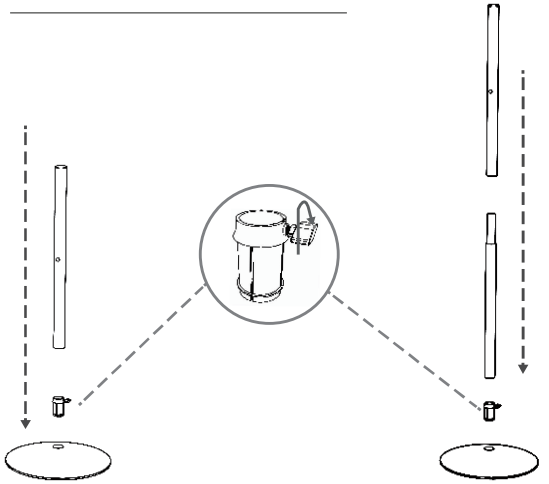

Install the top pole, bottom pole(optional) and base connector on the base. After that, fasten the side knob of the base connector to secure the installation.

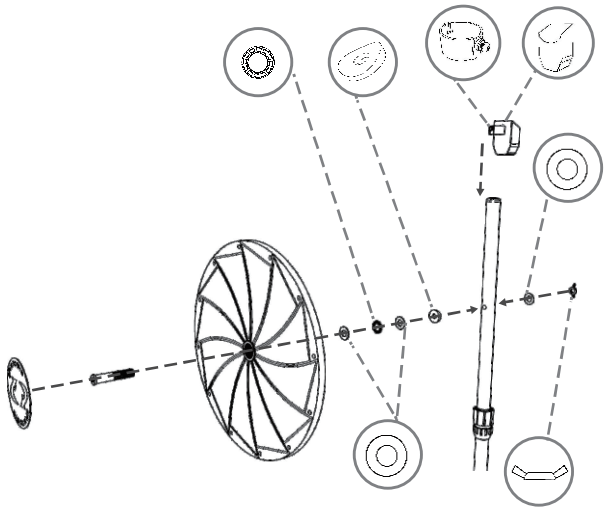

1. Install the wheel on the pole with bolt set and plastic washer.
2. Connect pen box and bracket and then intall them on the pole.
3. Install cover on the wheel

Install the top pole, bottom pole(optional)and base connector on the base. After that, fasten the side knob of the base connector to secure the installation.

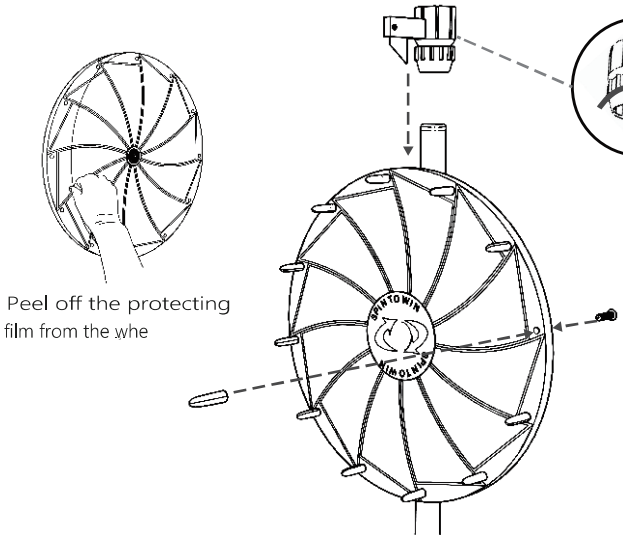

1. Install the top on the pole. Rotate and fasten it.
2. Install teeth on the wheel with screws.

Changing Pointer

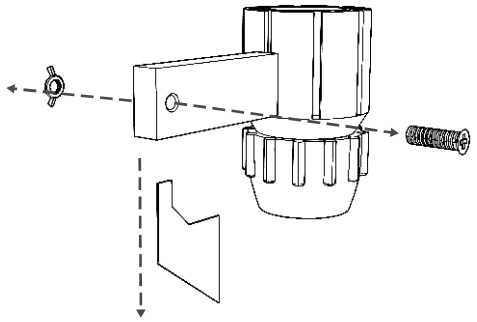

Loosen the screw and wing nut on the top and then you can take out the pointer and replace it.